(12) INTERNATIONAL APPLICATION PUBLISHED UNDER THE PATENT COOPERATION TREATY (PCT)

(19) World Intellectual Property Organization
International Bureau

(43) International Publication Date
22 December 2011 (22.12.2011)

PCT

(10) International Publication Number
WO 2011/158246 A1

(51) International Patent Classification:
B01L 3/00 (2006.01) *G01N 33/543* (2006.01)

(21) International Application Number:
PCT/IN2010/000424

(22) International Filing Date:
18 June 2010 (18.06.2010)

(25) Filing Language: English

(26) Publication Language: English

(72) Inventor; and
(71) Applicant : **PAWAN, Saharan** [IN/IN]; A 2101-04, Mansarovar, Neelkanth Heights, Pokhran Road No. 1, Thane(W) 400 601, Maharashtra (IN).

(74) Agent: **SHETH, Girish, Vijayanand**; Krishna & Saurastri Associates, 74/F, Venus, Worli Sea Face, Mumbai 400 018, Maharashtra (IN).

(81) Designated States *(unless otherwise indicated, for every kind of national protection available)*: AE, AG, AL, AM, AO, AT, AU, AZ, BA, BB, BG, BH, BR, BW, BY, BZ, CA, CH, CL, CN, CO, CR, CU, CZ, DE, DK, DM, DO, DZ, EC, EE, EG, ES, FI, GB, GD, GE, GH, GM, GT, HN, HR, HU, ID, IL, IN, IS, JP, KE, KG, KM, KN, KP, KR, KZ, LA, LC, LK, LR, LS, LT, LU, LY, MA, MD, ME, MG, MK, MN, MW, MX, MY, MZ, NA, NG, NI, NO, NZ, OM, PE, PG, PH, PL, PT, RO, RS, RU, SC, SD, SE, SG, SK, SL, SM, ST, SV, SY, TH, TJ, TM, TN, TR, TT, TZ, UA, UG, US, UZ, VC, VN, ZA, ZM, ZW.

(84) Designated States *(unless otherwise indicated, for every kind of regional protection available)*: ARIPO (BW, GH, GM, KE, LR, LS, MW, MZ, NA, SD, SL, SZ, TZ, UG, ZM, ZW), Eurasian (AM, AZ, BY, KG, KZ, MD, RU, TJ, TM), European (AL, AT, BE, BG, CH, CY, CZ, DE, DK, EE, ES, FI, FR, GB, GR, HR, HU, IE, IS, IT, LT, LU, LV, MC, MK, MT, NL, NO, PL, PT, RO, SE, SI, SK, SM, TR), OAPI (BF, BJ, CF, CG, CI, CM, GA, GN, GQ, GW, ML, MR, NE, SN, TD, TG).

Declarations under Rule 4.17:

— *of inventorship (Rule 4.17(iv))*

Published:

— *with international search report (Art. 21(3))*

— *with amended claims and statement (Art. 19(1))*

(54) Title: AN APPARATUS AND METHOD FOR DETECTING BIOLOGICAL STATE IN A SAMPLE USING BIOMARKERS

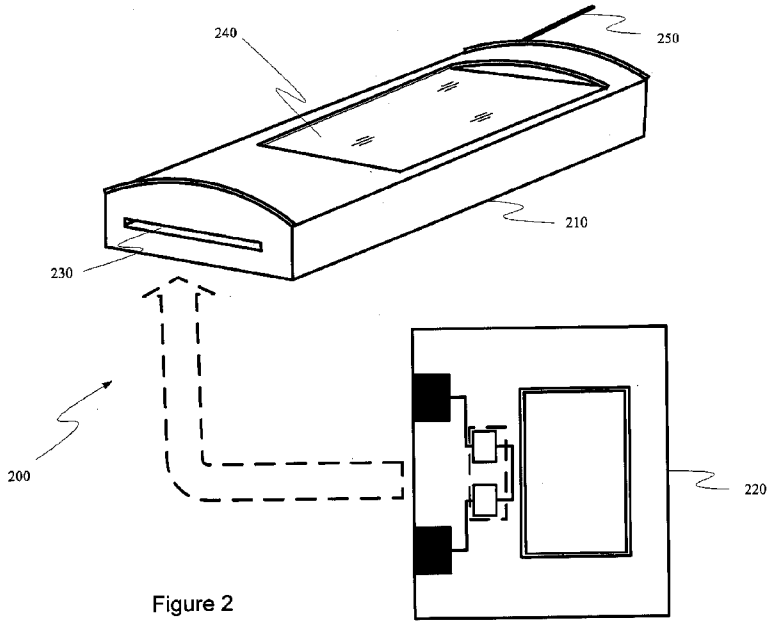

Figure 2

(57) Abstract: The invention relates to an apparatus (200) and method for detecting biological state in a sample using biomarkers. In one embodiment, this is accomplished by a reusable slide (220) having a sensor platform comprising one or more interaction cells, each of the interaction cells embedded with the biomarker, the interaction cells including an inlet for receiving the sample, and one or more sensor disposed in it, the sensor is capable of deflecting in response to chemical interaction between the biomarker and the sample. An integrated circuitry coupled to the reusable slide for performing the electronic measurements on the sensor platform, converting the signals to a digital representation and to exchange the data and other information with the apparatus, and an electrical contact to receive power from the apparatus. A diagnostic device (210) having a slide inserting slot and an interface for accommodating the reusable slide.

WO 2011/158246 A1

Title

AN APPARATUS AND METHOD FOR DETECTING BIOLOGICAL STATE IN A SAMPLE USING BIOMARKERS.

Field of the Invention

[0001] The invention presented herein relates generally to detection of biological state in a sample. More particularly, the present invention relates to an apparatus and method for detecting biological state in the sample using biomarkers.

Background of the Invention

[0002] Biomarkers are increasingly recognized for their potential not only as biologic harbingers that provide early warnings of disease but also biochemical monitors of patient responses to therapies. However, the field is hampered by a lack of reliable, quantifiable, easily measured biomarkers that correlate well with biochemical measures of disease progression.

[0003] The presence or absence of chemical compounds can be used to infer the disease status of the subject, as some diseases cause the accumulation of specific chemical compounds, or to detect chemical deficiencies of the subject. Devices for biological sample analysis utilize sensor for detection of biomarkers or chemical compounds.

[0004] The sensor has a surface containing one or more specific binding substances immobilized by physical adsorption or by chemical binding. The one or more specific binding substances can be bound to their binding partners. The one or more specific binding substances or binding partners can be selected from the group consisting of nucleic acids, polypeptides, antigens, polyclonal antibodies, monoclonal antibodies, single chain antibodies (scFv), F (ab) fragments, F (ab'). Sub.2 fragments,

Fv fragments, small organic molecules, cells, viruses, bacteria, polymers, protein solutions, peptide solutions, single or double stranded DNA solutions, RNA solutions, solutions containing compounds from a combinatorial chemical library and biological samples.

[0005] Diagnostics devices are well known for monitoring the biomarkers in a biological sample. Examples of various biological samples are blood, plasma, serum, gastrointestinal secretions, homogenates of tissues or tumors, synovial fluid, feces, saliva, sputum, cyst fluid, amniotic fluid, cerebrospinal fluid, peritoneal fluid, lung lavage fluid, semen, lymphatic fluid, tears, and prostatitc fluid.

[0006] At present many of the diagnostic devices having sensor, where the sensor housing is compact and contains all the sensor components, the configuration of the apertures may entrap air inside the housing that causes measurement errors. Because the segmented walls between the apertures hinder thorough cleaning, the sensor is non-reusable.

[0007] Moreover, in unitary microchip-based detection device employs a microcantilever sensor to detect a biochemical reaction in a single detection chamber. These devices fail to analyze a number of solutions simultaneously, and for the same it would be necessary to utilize an equal number of these chips.

[0008] For the reasons stated above, which will become apparent to those skilled in the art upon reading and understanding the present specification, there is a need in the art for an apparatus and method for detection of biological state of a sample using biomarkers which allows low cost measurement while still providing reusability and economical significance.

Summary of the Invention

[0009] According to one aspect of the invention there is provided an apparatus for detecting biological state of a sample using biomarkers, the apparatus comprising: a reusable slide including, a sensor platform comprising a plurality of interaction cells, each of the interaction cells embedded with the biomarker, the interaction cells including an inlet for receiving the sample, and at least one sensor disposed in it, the sensor is capable of deflecting in response to chemical interaction between the biomarker and the sample; an integrated circuitry coupled to the reusable slide for performing the electronic measurements on the sensor platform, converting the signals to a digital representation and to exchange the data and other information with the apparatus; and an electrical contact to receive power from the apparatus; and a diagnostic device having a slide inserting slot and an interface for accommodating the reusable slide.

[0010] In another aspect, the invention includes a method for detecting biological state in a sample using biomarkers, the method comprising the steps of: providing the sample on a reusable slide, wherein the reusable slide is having the sensor platform; washing off the excess sample using suitable agents; inserting the reusable slide into a diagnostic device for detecting and reading data from the sensor on the slide; and analyzing the responses of the sensors deflection due to chemical interaction between the biomarker and sample.

[0011] In another aspect, the invention includes a system for detecting biological state in a sample using biomarkers, the system comprising: a reusable slide including, a sensor platform comprising a plurality of interaction cells, each of the interaction cells embedded with the biomarker, the interaction cells including an inlet for receiving the sample, and at least one sensor disposed in it, the sensor is capable of

deflecting in response to chemical interaction between the biomarker and the sample; an integrated circuitry coupled to the reusable slide for performing the electronic measurements on the sensor platform, converting the signals to a digital representation and to exchange the data and other information with the apparatus; and an electrical contact to receive power from the apparatus; a diagnostic device having a slide inserting slot and an interface for accommodating the reusable slide, wherein the diagnostic device including a display and an antenna; at least one communication network; and at least one server including a database for storing the data received from the diagnostic device.

[0012] Additional advantages and features of the present invention will be more apparent from the detailed description and accompanying drawings, which illustrate preferred embodiments of the invention.

Brief description of the drawings

[0013] Figure 1 shows a reusable slide (top view) according to one embodiment of the invention.

[0014] Figure 2 shows an apparatus for detecting biological state of a sample using biomarkers according to one embodiment of the invention.

[0015] Figure 3 shows a flow chart of a method for detecting biological state in a sample using biomarkers according to one embodiment of the invention.

[0016] Figure 4 shows a system for detecting biological state in a sample using biomarkers according to one embodiment of the invention.

Detail description of the Invention

[0017] In the following description, various aspects of the present invention will be described. However, it will be understood by those skilled in the art that the

present invention may be practiced with only some or all aspects of the present invention. For purposes of explanation, specific numbers, materials and configurations are set forth in order to provide a thorough understanding of the present invention. However, it will also be apparent to those skilled in the art that the present invention may be practiced without these specific details.

[0018] Additionally, various operations will be described as multiple discrete steps in turn in a manner that is helpful in understanding the present invention. However, the order of description should not be construed as to imply that these operations are necessarily order dependent, in particular, the order of their presentation.

[0019] Reference in the specification to "one embodiment" or "an embodiment" means that a particular feature, structure, or characteristic described in connection with the embodiment is included in at least one embodiment of the invention. The appearances of the phrase "in one embodiment" in various places in the specification are not necessarily all referring to the same embodiment.

[0020] Referring now to Figure 1, there is illustrated a reusable slide according to one embodiment of the invention. Figure 1 shows a reusable slide 100 having a sensor platform 110, an integrated circuitry 120 and a pair of electrical contacts 130. The reusable slide 100 made out of a suitable substrate such as glass, plastic, ceramic etc. The substrate of the slide 100 is independent of the material like plastic or ceramic or glass. The reusable slide 100 is either single use or it can be re-used after suitable cleaning and re-conditioning. The sensor platform 120 is integrated into the reusable slide 100. The sensor platform 120 having plurality of sensors, where each individual sensor has a surface containing one or more specific binding substances immobilized by physical adsorption or by chemical binding. The sensor array is so designed to accept various spectrum of biomarkers such as gases, antigens and foreign particles

from biological warfares and blood, plasma, serum, gastrointestinal secretions, homogenates of tissues or tumors, synovial fluid, feces, saliva, sputum, cyst fluid, amniotic fluid, cerebrospinal fluid, peritoneal fluid, lung lavage fluid, semen, lymphatic fluid, tears, prostatic fluid etc.

[0021] The one or more specific binding substances or binding substances can be bound to their binding partners. The one or more specific binding substances or binding partners can be selected from the group consisting of nucleic acids, polypeptides, antigens, polyclonal antibodies, monoclonal antibodies, single chain antibodies (scFv), F(ab) fragments, F(ab').sub.2 fragments, Fv fragments, small organic molecules, cells, viruses, bacteria, polymers, protein solutions, peptide solutions, single- or double-stranded DNA solutions, RNA solutions, solutions containing compounds from a combinatorial chemical library and biological samples.

[0022] The reusable slide 100 includes integrated circuitry 120 to perform the electronic measurements on all sensors, convert the signals to a digital representation and to exchange the data and other information with other components via a serial wired or wireless interface. The integrated circuitry 120 is a miniaturized electronic circuit (consisting mainly of semiconductor devices, as well as passive components) that has been manufactured in the surface of a thin substrate of semiconductor material. The integrated circuitry 120 is embedded because the same circuitry components can switch quickly and also consume little power (compared to their discrete counterparts) because of their small in size and the components are close together. Preferably, the integrated circuitry 120 is designed for converting the analog signals to digital signals (example: A/D converter).

[0023] The reusable slide 100 having electrical contacts 130 through which the power is received from the rest of the device to the integrated circuitry 120. In the case

of wired interface, at least two contacts to allow serial transfer of data to/from the reusable slide 100 which may include a clock line, and receive and/or transmit lines.

[0024] Referring now to Figure 2, there is illustrated an apparatus for detecting biological state of a sample using biomarkers according to one embodiment of the invention. Figure 2 shows an apparatus 200 including a portable diagnostic device 210 and a reusable slide 220. The diagnostic device 210 having a slide insertion slot 230, a touch screen display 240 and an antenna 250 for transmitting the data. The slide insertion slot 230 is for accommodating different reusable slides for detecting biomarkers or chemical compounds in biological samples. The detachable aspect of the reusable slide 220 by separating the biosensor from the diagnostic device 210. The apparatus make the reusability factor more prominent. The reusable slide 220 used for multiple tests and for multiple indications (example disease, gaseous etc). The diagnostic device 210 includes a touch screen display 240 for displaying the data attained from the analysis of the biological sample. The antenna 250 is coupled to the diagnostic device 210 to transmit the data (example: measurements) to a remote central location for further analysis of the biological sample. The apparatus 200 may be equipped in a mobile telephone or other portable equipment with any of simple or obvious modification.

[0025] In an operation of the apparatus 200, the reusable slide 220 is inserted into the diagnostic device 210. The diagnostic device 210 detects the reusable slide 220 through an interface (not shown in figure). The apparatus 200 is designed such that the interface between the diagnostic device 210 and the reusable slide 220 is independent of the type of sensor array on the slide, the number of sensors on the slide or the capability of the slide to perform pre-processing or any conditioning of the measurement data before exchanging the data with the rest of the apparatus.

[0026] Once the reusable slide 220 is detected by the diagnostic device 210, the integrated circuitry of the reusable slide 220 enables primary data reception from a set of sensor array. The sensor array of the reusable slide designed to accept various spectrum and variation of biomarkers. In an example embodiment, the sensor array may consist of field effect transistors, polymer composite sensors, and others. In each case the details may be different. The incorporation of sensor with the necessary circuitry is done to provide a normalized signal to the measurement device, as part of a glass reusable slide. Moreover, the sensor and associated circuitry will be manufactured on a silicon substrate; this substrate can easily be bonded to a standard glass slide. In an example embodiment, protection of the circuitry and wires connecting the sensor array to the circuitry and subsequently the circuitry output signals to the contact planes on the slide is achieved by bonding a plastic cover over the slide, exposing only the sensor array to the outside environment.

[0027] The biomarkers are used to determine the disease state of the subject by indicating the presence of biological agents such as viruses, bacteria, specific antibodies, antigens, etcetera etc. The presence or absence of chemical compounds can be used to infer the disease status of the sample, as some diseases cause the accumulation of specific chemical compounds, or to detect chemical deficiencies of the subject. The sample or biological sample can be selected from the group consisting of , blood, plasma, serum, gastrointestinal secretions, homogenates of tissues or tumors, synovial fluid, feces, saliva, sputum, cyst fluid, amniotic fluid, cerebrospinal fluid, peritoneal fluid, lung lavage fluid, semen, lymphatic fluid, tears, and prostatic fluid.

[0028] The detection of specific biomarkers or chemical compounds is performed by the binding of such to one or more specific binding substances which have been immobilized on a single sensor that can detect increases in volume, mass, surface tension, curvature, or other physical properties of the surface containing the

binding substance. The number of specific biomarkers and chemical compounds that can be detected simultaneously inside the apparatus, as well as the accuracy of detection is increased by using an array of such sensors present in the reusable slide. The number of sensors being limited only by the cost of manufacturing of the array and the circuitry and processing power required to analyze the measurement data from the array.

[0029] Each individual sensor has a surface containing one or more specific binding substances immobilized by physical adsorption or by chemical binding. The one or more specific binding substances can be bound to their binding partners. The one or more specific binding substances or binding partners can be selected from the group consisting of nucleic acids, polypeptides, antigens, polyclonal antibodies, monoclonal antibodies, single chain antibodies (scFv), F(ab) fragments, F(ab').sub.2 fragments, Fv fragments, small organic molecules, cells, viruses, bacteria, polymers, protein solutions, peptide solutions, single- or double-stranded DNA solutions, RNA solutions, solutions containing compounds from a combinatorial chemical library and biological samples.

[0030] As the biomarker or chemical compound like protein, polypeptides, DNA from AIDS, TB, CANCER, HEPATITIS and other patients fluid samples viz. blood, sputam, slavia, serum, sperms and vaginal fluids from male/female etc. (binding partner) binds to a receptor (binding substance), the sensor associated with that receptor undergoes some physical change which can be detected by any of the known method. The rate of change, the extent of the change and the type of change of the sensor can be used to infer the concentration, the total amount, and the variation of the biomarker or chemical compound.

[0031] The type of sensors that can be used includes but is not limited to micro scale cantilevers, nano scale cantilevers, field effect transistors, thin film transistors, polymer-composite sensors, reflective and refractive arrays. The sensor arrays can be organized in one, two or three dimensions, in regular or irregular grids. Sensor arrays can contain sensors of the same type, or of different types depending on the application.

[0032] The dimension of the cantilever array is specifically designed where the array is capable of being used with various biomarker materials in spite of miniature size (specific strengthening technology is used). The cantilever used has very high sensitivity for static detection and are generally very soft, i.e. they have very small spring constant. Also, the cantilever used is ensured to have low spring constant while having high resonance frequency.

[0033] In one example embodiment, the array of cantilevers made up of silicon, having length of 500 micron, thickness of 1 micron and width of 150 micron. The width may not be relevant for measurements of sensitivity. To increase the stress sensitivity of the cantilever, the spring constant is reduced, while the overall surface of the cantilever determines the number of molecules that should attach to the surface to cause a resulting stress change. Further, the use of porous silicon and nano-particles enables further enhanced characteristics of cantilever array while further reducing their dimensions.

[0034] Physical changes that are measured include movement, bending, surface swelling, changes in refractive index, elasticity, changes in surface topography, temperature, resistance, mass, roughness, reflectivity, absorbance, and stress. These physical changes of each sensor individually or sensors collectively can be determined by measuring resistance, capacitance, resonance frequency, temperature, reflection, interference patterns, acoustic wave propagation, and etcetera. Physical change is

measured dynamically (e.g. over time) in response to the presentation of the sample, or statically as a difference between before and after the presentation of the sample. The influence of external and environmental factors other than the binding of the biomarker or chemical compound onto the sensor receptor surface, such as ambient temperature, pressure, electro-magnetic fields, etcetera, is compensated for by the use of reference sensors dispersed throughout the array which react to these external factors in exactly the same way as the other sensors in the array, but do not bind any substances in the fluid. These reference sensors therefore contain information about the external factors affecting sensor readings. The measurement circuitry can use signals from these reference sensors as common mode signals for differential measurements of the signals from the active sensors.

[0035] The touch screen display 240 of the diagnostic device 210 provides or which helps in primary vie wig of the measurement results. The only requirement is that the interface is digital, requiring some kind of processing and conditioning of the signals from the sensors into a digital and serial form. This conversion and serialization is performed by a dedicated analog/digital circuit integrated into the sensor slide 220. Moreover, the integrated circuitry is capable of performing data acquisition, normalization and signal to noise enhancement which is required to achieve adequate measurement sensitivity.

[0036] In addition of the above, a simple packet serial data protocol may be used between the diagnostic device 210 and the reusable slide 220 is a protocol with error checking mechanisms such as cyclic redundancy check (CRC). Reusable slides will vary in sophistication and processing capacity. Some will have the ability to modify the measurement and/or data pre-processing parameters, in which case the protocol includes a simple command/response/handshake type data exchange. Other slides may only have simple data acquisition and data serialization capabilities, in

which case the protocol is one way and the slide simply starts transmitting data as soon as it is powered on. In either case, the reusable slide can be the originator of the clock signal or the recipient, depending again on its functionality. The rest of the apparatus is capable of detecting the presence of a clock signal and/or determining the requirements of the slide based on a simple exchange of data, including the sensor ID, at power up. The serial bus and protocol can be either a low level industry standard such as I2C, or not. USB or other high level bus or networking standard such as Ethernet is at this moment cost prohibitive for single-use. However, as processing power reduces in cost eventually this will no longer be the case and it is envisioned that the communications between reusable slide and data devices will use an open standard to allow interchange of 3rd party sensors and data devices.

[0037] Moreover, each reusable slide has an identification (ID) (not shown in figure) consisting of some string of characters, numbers and/or symbols. This ID is created at manufacture and is guaranteed to be unique i.e. no other reusable slide can exist with the same ID. All data measured and reported by this sensor slide is tagged with the ID of the slide and the date and time of measurement. Additionally, the reusable slide ID contains information on the class and type of the sensor slide which informs the rest of the apparatus about the capabilities of, and data measured by the reusable slide. The ID is printed in text and as a barcode or other digital image onto the reusable slide as well, so-that it is readable by a human as well as a barcode or other reader.

[0038] The combining of multiple sensor types and measurement types in one sensor may also improve the accuracy and signal to noise ratio by using multiple approaches and designing the circuitry to support them. The biosensors are made detachable by incorporating the sensor array in the reusable slide.

[0039] Referring now to Figure 3, there is illustrated a method 300 for detecting biological state in a sample using biomarkers according to one embodiment of the invention. At step 310, the method receives a sample on a reusable slide for detecting the biological state using biomarkers. The reusable slide includes a sensor platform, where the sensor platform having a plurality of interaction cells, each of the interaction cells embedded with the biomarker, the reusable slide including an inlet for receiving the sample, and at least one sensor disposed in it, the sensor is capable of deflecting in response to chemical interaction between the biomarker and the sample.

[0040] At step 320, the reusable slide is washed to remove the excess sample using water or any other suitable agents. In an example embodiment, the detection of RNA may be performed using the array and silane based immobilization. Surface chemical modification is first performed. The coupling of biomolecules to silicon by silanization is performed. This involves the covalent binding of a silane molecule to the surface or to another silane molecule through a siloxane bond. Then the probe molecules are immobilized on the surface. The RNA would stick to the probe molecule, which is used for detection of RNA.

[0041] Various methods of sterilization of silicon may be used such as elevated and room-temperature organic phase, vapour phase, and chemical vapour deposition. For the detection various reagents and solutions are used. In an exemplary embodiment buffer solutions were prepared from DNase- and RNase- free analytical grade reagents and sterile deionised water. The buffer solution that may be used in the method are the 20mM MOPS, 100mM Nacl, pH 7.4 for the immobilization buffer. Further 20mM Tris-Hcl, 100mM NaCl, pH 7.4.

[0042] In another embodiment the detection of DNA and RNA using the array sensors and thiol based immobilization is performed. Thiols (SH groups) chemisorb on gold making it possible to achieve a high surface coverate of any type of molecules that have thiol groups. Examples of such molecules are alkanethoiols such as mercapto-hexane, proteins like cysteine, amino acids, or oligonucleotide chain modified with a thiol group. Using thiol modified oligonucleotides makes it possible to create moluecular layer on a gold surface, which can be used as a platform for hybridization detection in a biosensor.

[0043] At step 330, the method allows to insert the reusable slide into the diagnostic device for detecting biomarkers or chemical compounds in the sample. The biomarkers are used to determine the disease state of the subject by indicating the presence of biological agents such as viruses, bacteria, specific antibodies, antigens, etcetera etc. The presence or absence of chemical compounds can be used to infer the disease status of the subject, as some diseases cause the accumulation of specific chemical compounds, or to detect chemical deficiencies of the subject.

[0044] At step 340, the method streams the date received from the deflected sensors. As the biomarker or chemical compound (binding partner) binds to a receptor (binding substance), the sensor associated with the receptor undergoes some physical change which is detected. The number of specific biomarkers and chemical compounds that can be detected simultaneously inside the apparatus, as well as the accuracy of detection is increased by using an array of such sensors. The number of sensors being limited only by the cost of manufacturing of the array and the circuitry and processing power required to analyse the measurement data from the array. The received data are compared with the measurement of reference sensors for accurate analysis. The influence of external and environmental factors other than the binding of the biomarker or chemical compound onto the sensor receptor surface, such as ambient temperature,

pressure, electro-magnetic fields, etcetera etc are balanced by the reference sensors. These reference sensors contain information about the external factors affecting sensor readings. By the use of the reference sensors measurements, the result attained by the device is accurate.

[0045] At step 350, the method analyse the responses of the sensors deflection due to chemical interaction between the biomarker and the sample.

[0046] At step 360, the method display the analyzed result on the touch screen display or it can also be transmitted to another remote location for further analysis.

[0047] Referring now to Figure 4, there is illustrated a system 400 for detecting biological state in a sample using biomarkers. The system 400 includes an apparatus 410, one or more network 460 and a server 440 with a database 450. The apparatus having a diagnostic device 420 for the analysis of a single or multiple analytes that originates from a biological sample. The apparatus also includes a reusable slide 430 having a sensor platform, an integrated circuitry and a pair of electrical contacts. In one operation of the system, the apparatus 410 coupled to one or more communication network for transmitting the detected data by way of passing the signals to different networks or one or more servers for further analysis.

[0048] The communication network 460 may be or may include one or more network selected from a group of networks consisting of a layer-2 networks, a metropolitan area network, a wide area network and the like. The communication channel 470 between the apparatus 410 and the server 440 through the network 460 is a uni-directional link or a bi-directional link or both. The apparatus 410 transmit or in communication with the server 440 through a network 460, where the server 440 receive signals (data) and stores in a secure database 450.

[0049] The server may be or may include, for example, a mobile phone, a cellular phone, a handheld device, a computing device, a computer, a mobile computer, a portable computer, a laptop computer, a handheld computer, a handheld device, a PDA device, a handheld PDA device, a mobile or portable device, or the like. According to some aspects, the server 440 may comprise a communication device connectable to one of the other devices/ network via a wired or wireless connection.

[0050] FIGS. 1-4 are merely representational and are not drawn to scale. Certain portions thereof may be exaggerated, while others may be minimized. FIGS. 1-4 illustrate various embodiments of the invention that can be understood and appropriately carried out by those of ordinary skill in the art.

[0051] In the foregoing detailed description of embodiments of the invention, various features are grouped together in a single embodiment for the purpose of streamlining the disclosure. This method of disclosure is not to be interpreted as reflecting an intention that the claimed embodiments of the invention require more features than are expressly recited in each claim. Rather, as the following claims reflect, inventive subject matter lies in less than all features of a single disclosed embodiment. Thus, the following claims are hereby incorporated into the detailed description of embodiments of the invention, with each claim standing on its own as a separate embodiment.

[0052] It is understood that the above description is intended to be illustrative, and not restrictive. It is intended to cover all alternatives, modifications and equivalents as may be included within the spirit and scope of the invention as defined in the appended claims. Many other embodiments will be apparent to those of skill in the art upon reviewing the above description. The scope of the invention should, therefore, be determined with reference to the appended claims, along with the full

scope of equivalents to which such claims are entitled. In the appended claims, the terms "including" and "in which" are used as the plain-English equivalents of the respective terms "comprising" and "wherein," respectively.

I CLAIM

1. An apparatus for detecting biological state of a sample using biomarkers, the apparatus comprising:

a reusable slide including,

a sensor platform comprising a plurality of interaction cells, each of the interaction cells embedded with the biomarker, the interaction cells including an inlet for receiving the sample, and at least one sensor disposed in it, the sensor is capable of deflecting in response to chemical interaction between the biomarker and the sample;

an integrated circuitry coupled to the reusable slide for performing the electronic measurements on the sensor platform, converting the signals to a digital representation and to exchange the data and other information with the apparatus; and

an electrical contact to receive power from the apparatus;

and

a diagnostic device having a slide inserting slot and an interface for accommodating the reusable slide.

2. The apparatus as claimed in claim 1, wherein the sensor includes micro scale cantilevers, nano scale cantilevers, field effect transistors, polymer-composite sensors, reflective and refractive arrays.

3. The apparatus as claimed in claim 1, wherein the physical changes of each sensor or sensors collectively determined by measuring resistance, capacitance,

resonance frequency, temperature, reflection, interference patterns, acoustic wave propagation, etcetera.

4. The apparatus as claimed in claim 1, wherein the integrated circuitry is an analog to digital converter circuit.

5. The apparatus as claimed in claim 1, wherein the slide having two contacts for the wired interface to allow serial transfer of data including a clock line and also to receive and/or transmit lines.

6. The apparatus as claimed in claim 1, wherein the diagnostic device comprising a display for displaying the measurement results.

7. The apparatus as claimed in claim 1, wherein the diagnostic device comprising an antenna for transmitting the various measurement to a remote location.

8. The apparatus as claimed in claim 1, wherein the interface of the diagnostic device is independent of the type of sensor array on the slide and the number of sensors on the slide.

9. The apparatus as claimed in claim 1, wherein the reusable slide has the capability to perform pre-processing or any conditioning of the measurement data before exchanging the data with the rest of the apparatus.

10. The apparatus as claimed in claim 1, wherein the reusable slide is made up of glass.

11. A method for detecting biological state in a sample using biomarkers, the method comprising the steps of:

providing the sample on a reusable slide, wherein the reusable slide is having the sensor platform;

washing off the excess sample using suitable agents;

inserting the reusable slide into a diagnostic device for detecting and reading data from the sensor on the slide; and

analyzing the responses of the sensors deflection due to chemical interaction between the biomarker and sample.

12. The method as claimed in claim 11, wherein the step of detecting comprising authenticating the reusable reusable slide and start exchanging of data with the diagnostic device, wherein the data includes slide identification code, capability and the requirements for initiating the process.

13. The method as claimed in claim 11, wherein the step of detecting further comprising:

transmitting the reusable slide ID and the serialized sensor data from the reusable reusable slide to the remote server.

14. The method as claimed in claim 11, wherein the step of analyzing further comprising:

streaming the data received from the deflected sensors and comparing the measurement with the reference sensors for accurate analysis.

15. The method as claimed in claim 11, further comprising:

displaying the data attained from the analysis of the sample.

16. A system for detecting biological state in a sample using biomarkers, the system comprising:

a reusable slide including,

a sensor platform comprising a plurality of interaction cells, each of the interaction cells embedded with the biomarker, the reusable slide including an inlet for receiving the sample, and at least one sensor disposed in it, the sensor

is capable of deflecting in response to chemical interaction between the biomarker and the sample;

an integrated circuitry coupled to the reusable slide for performing the electronic measurements on the microcantilever platform, converting the signals to a digital representation and to exchange the data and other information with the apparatus; and

an electrical contact to receive power from the apparatus;

a diagnostic device having a slide inserting slot and an interface for accommodating the reusable slide, wherein the diagnostic device including a display and an antenna;

at least one communication network; and

at least one server including a database for storing the data received from the diagnostic device.

AMENDED CLAIMS
received by the International Bureau on 22 April 2011 (22.04.2011)

1. An apparatus for detecting biological state of a sample using biomarkers, the apparatus comprising:

a reusable slide including,

a sensor platform comprising a plurality of interaction cells, each of the interaction cells embedded with the biomarker, the interaction cells including an inlet for receiving the sample, and at least one sensor disposed in it, wherein the sensor deflects in response to chemical interaction between the biomarker and the sample;

an integrated circuitry coupled to the reusable slide for performing the electronic measurements on the sensor platform, converting the signals to a digital representation and to exchange the data and other information with the apparatus; and

an electrical contact to receive power from the apparatus;

and

a diagnostic device having a slide inserting slot and an interface for accommodating the reusable slide, wherein the diagnostic device and the reusable slide are independent of the type of sensor array on the slide.

2. The apparatus as claimed in claim 1, wherein the sensor includes micro scale cantilevers, nano scale cantilevers, field effect transistors, polymer-composite sensors, reflective and refractive arrays.

3. The apparatus as claimed in claim 1, wherein the physical changes of each sensor or sensors collectively determined by measuring resistance, capacitance, resonance frequency, temperature, reflection, interference patterns, acoustic wave propagation.

4. The apparatus as claimed in claim 1, wherein the integrated circuitry is an analog to digital converter circuit.

5. The apparatus as claimed in claim 1, wherein the slide having two contacts for the wired interface to allow serial transfer of data including a clock line and also to receive and/or transmit lines.

6. The apparatus as claimed in claim 1, wherein the diagnostic device comprising a display for displaying the measurement results.

7. The apparatus as claimed in claim 1, wherein the diagnostic device comprising an antenna for transmitting the various measurement to a remote location.

8. The apparatus as claimed in claim 1, wherein the interface of the diagnostic device is independent of the type of sensor array on the slide and the number of sensors on the slide.

9. The apparatus as claimed in claim 1, wherein the reusable slide has the capability to perform pre-processing or any conditioning of the measurement data before exchanging the data with the rest of the apparatus.

10. The apparatus as claimed in claim 1, wherein the reusable slide is made up of glass.

11. A method for detecting biological state in a sample using biomarkers, the method comprising the steps of:

providing the sample on a reusable slide, wherein the reusable slide is having the sensor platform;

washing off the excess sample using suitable agents;

inserting the reusable slide into a diagnostic device for detecting and reading data from the sensor on the slide, wherein the diagnostic device and the reusable slide are independent of the type of sensor array on the slide; and

analyzing the responses of the sensors deflection due to chemical interaction between the biomarker and sample.

12. The method as claimed in claim 11, wherein the step of detecting comprising authenticating the reusable slide and start exchanging of data with the diagnostic device, wherein the data includes slide identification code, capability and the requirements for initiating the process.

13. The method as claimed in claim 11, wherein the step of detecting further comprising:

transmitting the reusable slide ID and the serialized sensor data from the reusable reusable slide to the remote server.

14. The method as claimed in claim 11, wherein the step of analyzing further comprising:

streaming the data received from the deflected sensors and comparing the measurement with the sensors for accurate analysis.

15. The method as claimed in claim 11, further comprising:

displaying the data attained from the analysis of the sample.

16. A system for detecting biological state in a sample using biomarkers, the system comprising:

a reusable slide including,

a sensor platform comprising a plurality of interaction cells, each of the interaction cells embedded with the biomarker, the reusable slide including an inlet for receiving the sample, and at least one sensor disposed in it, wherein the sensor deflects in response to chemical interaction between the biomarker and the sample;

an integrated circuitry coupled to the reusable slide for performing the electronic measurements on the microcantilever platform, converting the signals to a digital representation and to exchange the data and other information with the apparatus; and

an electrical contact to receive power from the apparatus;

a diagnostic device having a slide inserting slot and an interface for accommodating the reusable slide, wherein the diagnostic device and the reusable slide are independent of the type of sensor array on the slide, and wherein the diagnostic device including a display and an antenna;

at least one communication network; and

at least one server including a database for storing the data received from the diagnostic device.

STATEMENT UNDER ARTICLE 19(1)

Unity of invention

The Applicant herewith submits that claims 1-10 relates to an apparatus for detecting biological state of a sample using biomarkers and claim 11-15 relates to a method of performing the same with the help of the apparatus as claimed in 1-10. The method claims 11-15 teach how the steps have to be performed to achieve the preamble using the claimed apparatus. Further, the Applicant has amended the method claims 11-15 to make it dependent with the apparatus claims. In view of the above, the Applicant believes that the claims 1-10 and claims 11-15 falls within the scope of single inventive concept and the question of unity of invention does not arise.

Novelty

D1 - WO 2005/074161 A1 (Peeters John P)

The problem solved by the D1 document is firstly ability of a RFID reader to communicate through the use of multiple protocols. Secondly, able to monitor objects containing the RFID tag from virtually any location. Thirdly, inability of wireless devices to be used as

RFID readers. In contrast, present claimed invention describes about the present invention relates to an apparatus and method for detecting biological state in the sample using biomarkers. The present invention solves the problem where the diagnostic devices having sensor, where the sensor is non-reusable due to the configuration of the apertures which leads to entrap air inside the sensor housing which causes measurement errors. Moreover, D1 restrict the scope with respect to the RFID tags which is nowhere related to the present claimed invention.

In Abstract, where D1 generally describes about the "disease-specific wireless biomarker detection", but D1 fails to teach or suggest "the diagnostic device and the reusable slide are independent of the type of sensor array on the slide", as recited in presently amended independent claims 1, 11 and 16. Further, the claimed invention is **not** in the context of RFID tags.

For the above reasons, claims in question are distinguishable and hence they are novel. In any manner the present invention is not related to the cited art.

Claims 2-10, 12-15 are depend directly or indirectly on the amended independent claims 1, 11 and 16. So they also should be found allowable for the same reason presented above.

D2- WO00/52457 (HELIX BIOPHARMA CORP)

D2 described about a diagnostic card device use in detecting or quantitating an analyte present in a liquid sample. The cited reference of Page 10, line 18 and page 14, line 20 D2 which describes a control sample-flow pathway and background control biosensor which is irrelevant with respect to the claimed present application. Further, D2 does not teach or suggest "the diagnostic device and the reusable slide are independent of the type of sensor array on the slide" as recited in presently amended claims 1, 11 and 16.

For the above reasons, claims in question are distinguishable and hence they are novel. In any manner the present invention is not related to the cited art.

Claims 2-10, 12-15 are depend directly or indirectly on the amended independent claims 1, 11 and 16. So they also should be found allowable for the same reason presented above.

D3- US 2005/031490 (GUMBRECHT WALTER ET AL)

D3 generally describes about the electrochemical reactions electrically influenced or takes place by inquiring electrical signals in a sensor chip. D 3 does not disclose about an apparatus for detecting biological state of a sample using biomarkers using a reusable slide including a sensor platform a diagnostic device having a slide inserting slot and an interface for accommodating the reusable slide. Further D3 fails to teach or suggest "the diagnostic device and the reusable slide are independent of the type of sensor array on the slide" as recited in presently amended independent claims 1, 11 and 16.

For the above reasons, claims in question are distinguishable and hence they are novel. In any manner the present invention is not related to the cited art.

Claims 2-10, 12-15 are depend directly or indirectly on the amended independent claims 1, 11 and 16. So they also should be found allowable for the same reason presented above.

D4- US 6726820 (FRAZIER JEFFERY D)

In paragraph 14-26, D 4 describes an apparatus for acting on one or more biomolecule-containing samples supported by a microdevice, such as a microdevice including an integrated readable-writable-rewritable memory. D 4 does not teach or suggest an apparatus for detecting biological state of a sample using biomarkers, where the apparatus includes a reusable slide and a diagnostic device. Further, D 4 fails to teach "a diagnostic device having a slide inserting slot and an interface for accommodating the reusable slide, wherein the diagnostic device and the reusable slide are independent of the type of sensor array on the slide" as recited in presently amended independent claims 1, 11 and 16.

For the above reasons, claims in question are distinguishable and hence they are novel. In any manner the present invention is not related to the cited art.

Claims 2-10, 12-15 are depend directly or indirectly on the amended independent claims 1, 11 and 16. So they also should be found allowable for the same reason presented above.

D-5 US 2005/059105 (ALOCILJA EVANGELYN C ET AL)

D 5 describes about a device for detecting a microorganism having a holder means with an electrode means and a detection sensor. The process for detecting a microorganism as D5 describes as inserting a biosensor into test sample solution, leave biosensor in solution to allow antibody-antigen to bind together (2-3 minutes), remove biosensor from test sample, and insert the biosensor into a sterile solution. D 5 does not disclose or suggest a reusable slide as recited in independent claims 1, 11 and 16. Also, D 5 fails to teach or suggest "a diagnostic device having a slide inserting slot and an interface for accommodating the reusable slide, wherein the diagnostic device and the reusable slide are independent of the type of sensor array on the slide" as recited in presently amended independent claims 1, 11 and 16.

For the above reasons, claims in question are distinguishable and hence they are novel. In any manner the present invention is not related to the cited art.

Claims 2-10, 12-15 are depend directly or indirectly on the amended independent claims 1, 11 and 16. So they also should be found allowable for the same reason presented above.

Inventive Step

D2- WO00/52457 (HELIX BIOPHARMA CORP)

D2 described about a diagnostic card device use in detecting or quantitating an analyte present in a liquid sample. The cited reference of Page 10, line 18 and page 14, line 20 D2 which describes a control sample-flow pathway and background control biosensor which is irrelevant with respect to the claimed present application. Based on reasoning and argument above, Applicant believes that a combination of D2 with D1, D3-D5 does not result in Applicant invention as recited in amended independent claims 1, 11 and 16. It is noted that as discussed above, the combination of D2 with D1, D3-D5 does not teach or suggest "a diagnostic device

having a slide inserting slot and an interface for accommodating the reusable slide, wherein the diagnostic device and the reusable slide are independent of the type of sensor array on the slide" as recited in presently amended independent claims 1, 11 and 16.

Claims 2-10 and 12-15 depend directly or indirectly on the independent claims 1, 11 and 16. For the same reason presented above, claims in question are patentable over the cited arts.

It is evident from all the cited art that there are various device and method to achieve detection biological state of a sample using biomarkers. The present invention adopted here is completely new to achieve the same. In any manner the present invention is not related to the cited art. A person skilled in this art can not envisage the present invention if all the cited art put together.

Finally, the Applicants submit that the amendments made to the claims are falling within the scope of the originally filed specification and no additional material or matter is added to the amended claims. In fact, the amendments carried to the claims are of restrictive in nature.

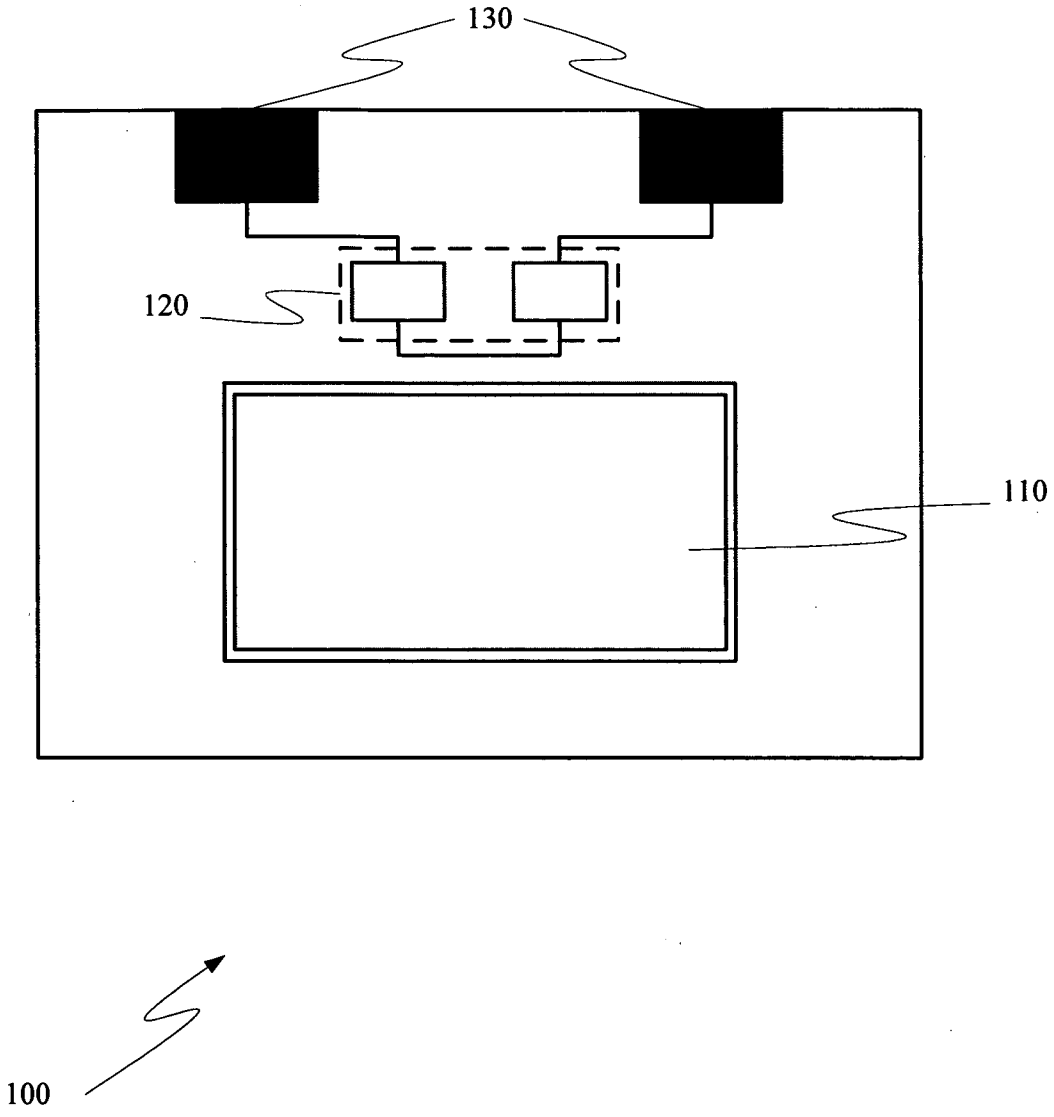

Figure 1

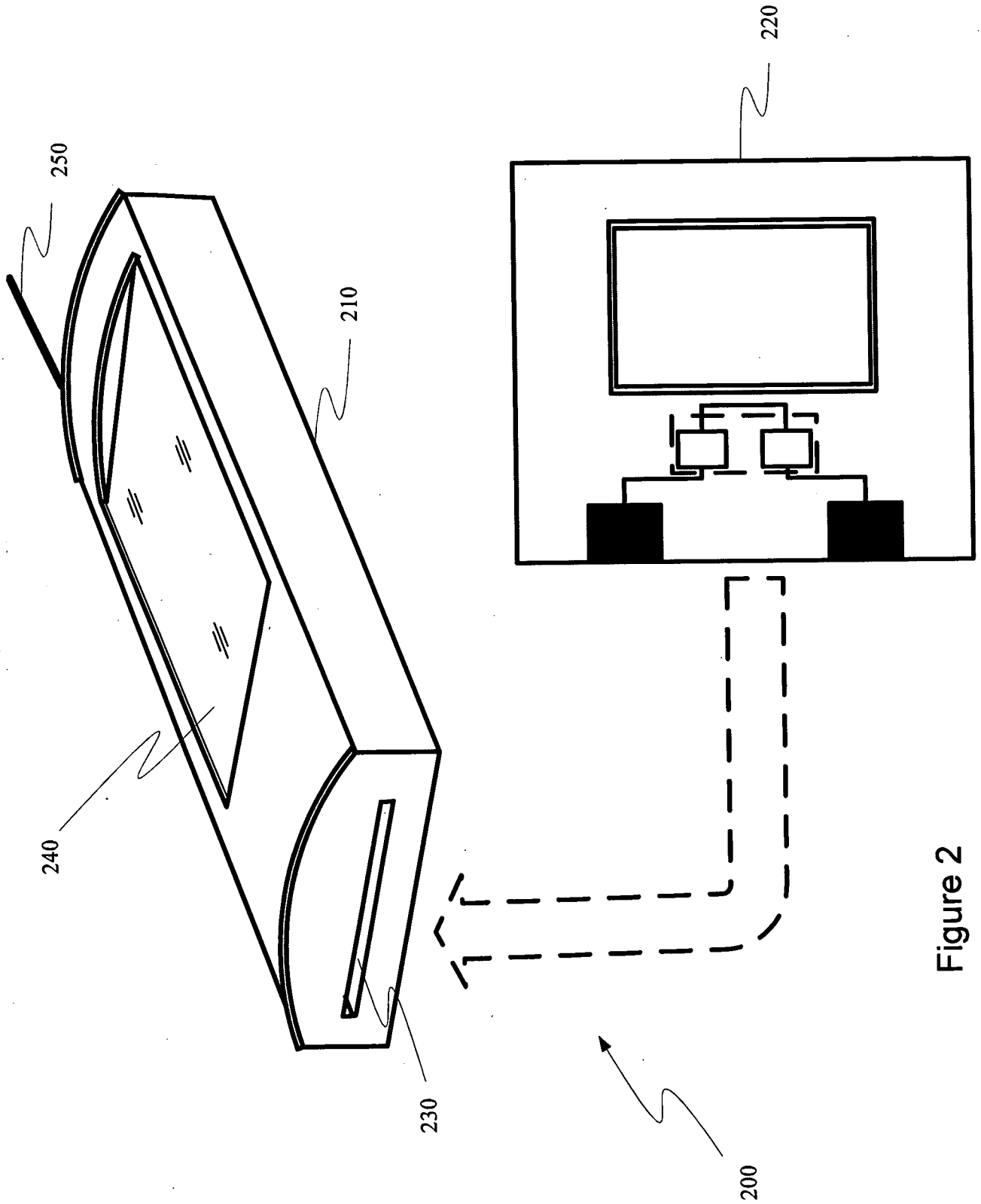

Figure 2

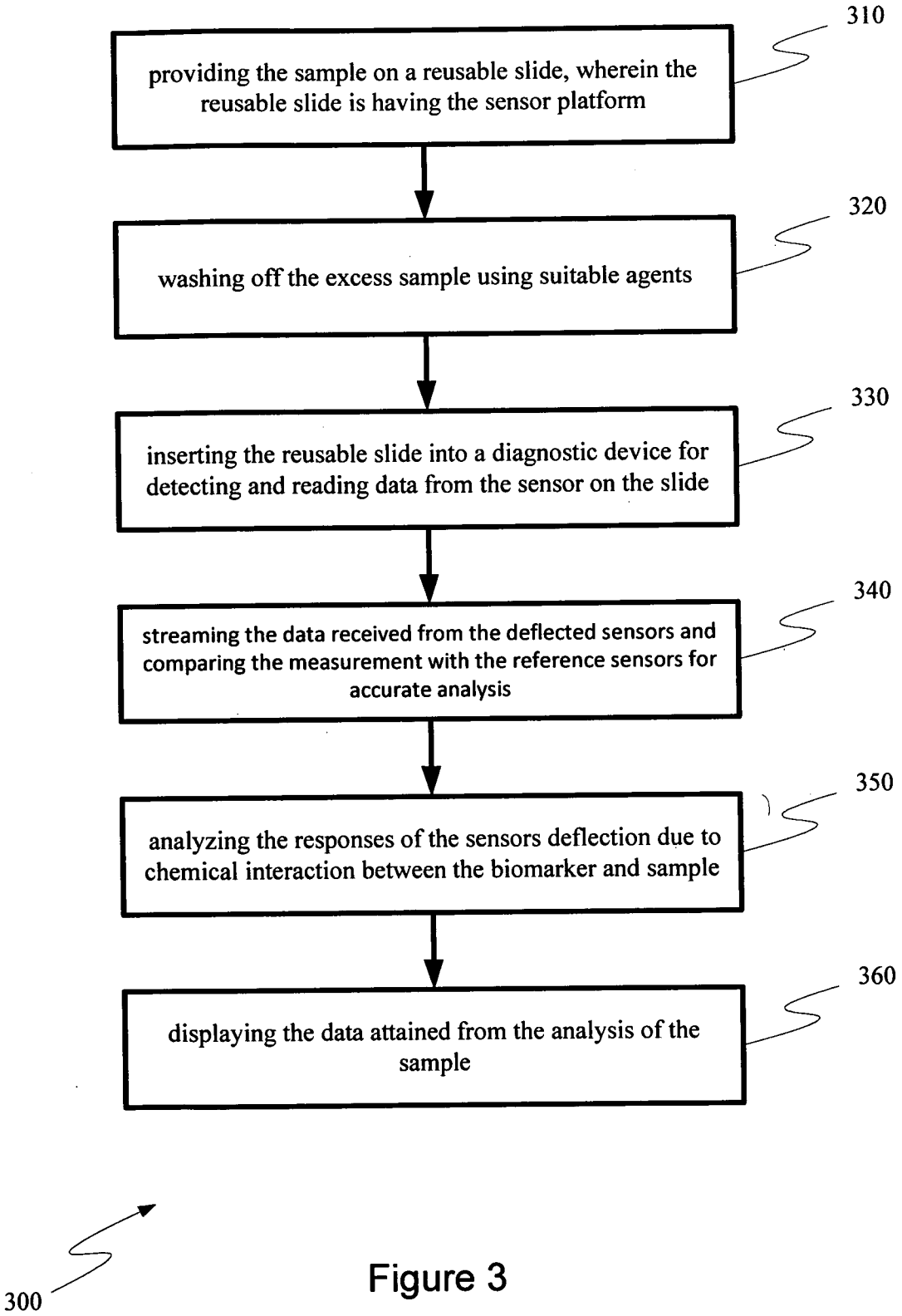
310
providing the sample on a reusable slide, wherein the reusable slide is having the sensor platform
320
washing off the excess sample using suitable agents
330
inserting the reusable slide into a diagnostic device for detecting and reading data from the sensor on the slide
340
streaming the data received from the deflected sensors and comparing the measurement with the reference sensors for accurate analysis
350
analyzing the responses of the sensors deflection due to chemical interaction between the biomarker and sample
360
displaying the data attained from the analysis of the sample
300

Figure 3

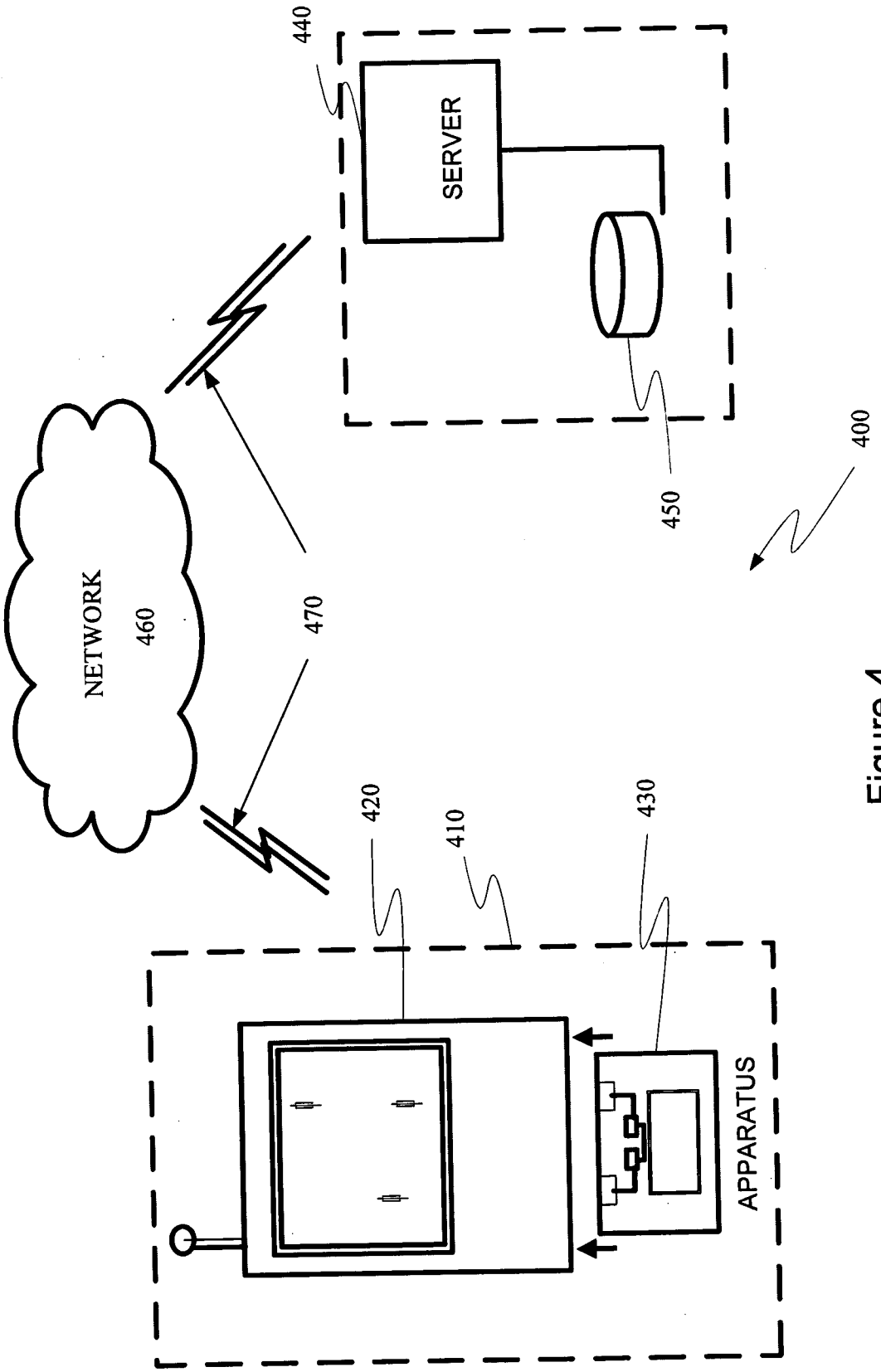

Figure 4

INTERNATIONAL SEARCH REPORT

International application No
PCT/IN2010/000424

A. CLASSIFICATION OF SUBJECT MATTER
INV. B01L3/00 G01N33/543
ADD.

According to International Patent Classification (IPC) or to both national classification and IPC

B. FIELDS SEARCHED

Minimum documentation searched (classification system followed by classification symbols)
B01L G01N

Documentation searched other than minimum documentation to the extent that such documents are included in the fields searched

Electronic data base consulted during the international search (name of data base and, where practical, search terms used)

EPO-Internal

C. DOCUMENTS CONSIDERED TO BE RELEVANT

Category*	Citation of document, with indication, where appropriate, of the relevant passages	Relevant to claim No.
X	WO 2005/074161 A1 (PEETERS JOHN P [US]) 11 August 2005 (2005-08-11) the whole document	1-16

X	WO 00/52457 A1 (HELIX BIOPHARMA CORP [CA]) 8 September 2000 (2000-09-08)	1-6,8-15
Y	page 10, line 18 - page 14, line 20; figures 1-6,22,23; examples 1,2	7,16

X	US 2005/031490 A1 (GUMBRECHT WALTER [DE] ET AL) 10 February 2005 (2005-02-10) paragraph [0031] - paragraph [0058]; figures 4,4a	1-6,8-15

	-/--	

[X] Further documents are listed in the continuation of Box C.

[X] See patent family annex.

* Special categories of cited documents :

"A" document defining the general state of the art which is not considered to be of particular relevance

"E" earlier document but published on or after the international filing date

"L" document which may throw doubts on priority claim(s) or which is cited to establish the publication date of another citation or other special reason (as specified)

"O" document referring to an oral disclosure, use, exhibition or other means

"P" document published prior to the international filing date but later than the priority date claimed

"T" later document published after the international filing date or priority date and not in conflict with the application but cited to understand the principle or theory underlying the invention

"X" document of particular relevance; the claimed invention cannot be considered novel or cannot be considered to involve an inventive step when the document is taken alone

"Y" document of particular relevance; the claimed invention cannot be considered to involve an inventive step when the document is combined with one or more other such documents, such combination being obvious to a person skilled in the art.

"&" document member of the same patent family

Date of the actual completion of the international search	Date of mailing of the international search report
14 February 2011	22/02/2011

Name and mailing address of the ISA/	Authorized officer
European Patent Office, P.B. 5818 Patentlaan 2 NL - 2280 HV Rijswijk Tel. (+31-70) 340-2040, Fax: (+31-70) 340-3016	Marti, Pedro

INTERNATIONAL SEARCH REPORT

International application No
PCT/IN2010/000424

C(Continuation). DOCUMENTS CONSIDERED TO BE RELEVANT

Category*	Citation of document, with indication, where appropriate, of the relevant passages	Relevant to claim No.
X	US 6 726 820 B1 (FRAZIER JEFFERY D [US]) 27 April 2004 (2004-04-27) paragraph [0014] - paragraph [0026] paragraph [0059] - paragraph [0069]; figures 1,2 -----	1-4,8-10
X	US 2005/059105 A1 (ALOCILJA EVANGELYN C [US] ET AL) 17 March 2005 (2005-03-17) the whole document -----	11-15
Y	WO 2010/004332 A1 (RAYMOND A LAMB LTD [GB]; HUGHES THOMAS FERGUS [GB]) 14 January 2010 (2010-01-14) the whole document -----	7,16
A	WO 2009/035732 A2 (UNIV DREXEL [US]; RAJAKKANNU MUTHARASSAN [US]; MARALDO DAVID R [US]) 19 March 2009 (2009-03-19) the whole document -----	1-16
A	WO 2009/093019 A2 (IMP INNOVATIONS LTD [GB]; GREEN MINO [GB]) 30 July 2009 (2009-07-30) the whole document -----	11-15

INTERNATIONAL SEARCH REPORT

International application No.
PCT/IN2010/000424

Box No. II Observations where certain claims were found unsearchable (Continuation of item 2 of first sheet)

This international search report has not been established in respect of certain claims under Article 17(2)(a) for the following reasons:

1. ☐ Claims Nos.:
because they relate to subject matter not required to be searched by this Authority, namely:

2. ☐ Claims Nos.:
because they relate to parts of the international application that do not comply with the prescribed requirements to such an extent that no meaningful international search can be carried out, specifically:

3. ☐ Claims Nos.:
because they are dependent claims and are not drafted in accordance with the second and third sentences of Rule 6.4(a).

Box No. III Observations where unity of invention is lacking (Continuation of item 3 of first sheet)

This International Searching Authority found multiple inventions in this international application, as follows:

see additional sheet

1. ☐ As all required additional search fees were timely paid by the applicant, this international search report covers all searchable claims.

2. ☒ As all searchable claims could be searched without effort justifying an additional fees, this Authority did not invite payment of additional fees.

3. ☐ As only some of the required additional search fees were timely paid by the applicant, this international search report covers only those claims for which fees were paid, specifically claims Nos.:

4. ☐ No required additional search fees were timely paid by the applicant. Consequently, this international search report is restricted to the invention first mentioned in the claims; it is covered by claims Nos.:

Remark on Protest

☐ The additional search fees were accompanied by the applicant's protest and, where applicable, the payment of a protest fee.

☐ The additional search fees were accompanied by the applicant's protest but the applicable protest fee was not paid within the time limit specified in the invitation.

☐ No protest accompanied the payment of additional search fees.

FURTHER INFORMATION CONTINUED FROM PCT/ISA/ 210

This International Searching Authority found multiple (groups of) inventions in this international application, as follows:

1. claims: 1-10, 16

   Claims 1-10: Apparatus for detecting biological state of a sample using biomarkers comprising a reusable slide and a diagnostic device having a slide inserting slot and an interface for accommodating the reusable slide, wherein the reusable slide includes a sensor platform capable of deflecting in response to chemical interaction between the biomarker and the sample; an integrated circuitry coupled to the reusable slide for performing the electronic measurements on the sensor platform, converting the signals to a digital representation and to exchange the data and other information with the apparatus; and an electrical contact to receive power from the apparatus.
   Claim 16: System for detecting biological state in a sample using biomarkers, the system comprising a reusable slide, a diagnostic device, wherein the diagnostic device including a display and an antenna; at least one communication network; and at least one server including a database for storing the data received from the diagnostic device.

   ---

2. claims: 11-15

   Method for detecting biological state in a sample using biomarkers comprising the steps of providing the sample on a reusable slide, wherein the reusable slide is having the sensor platform; washing off the excess sample using suitable agents; inserting the reusable slide into a diagnostic device for detecting and reading data from the sensor on the slide; and analyzing the responses of the sensors deflection due to chemical interaction between the biomarker and sample.

INTERNATIONAL SEARCH REPORT

Information on patent family members

International application No
PCT/IN2010/000424

Patent document cited in search report		Publication date	Patent family member(s)			Publication date
WO 2005074161	A1	11-08-2005	CA	2554007	A1	11-08-2005
			CN	1914823	A	14-02-2007
			EP	1709750	A1	11-10-2006
			JP	2007519484	T	19-07-2007
			KR	20060116028	A	13-11-2006
			US	2009209904	A1	20-08-2009
			US	2006290496	A1	28-12-2006
WO 0052457	A1	08-09-2000	AU	5646800	A	21-09-2000
US 2005031490	A1	10-02-2005	CA	2440126	A1	19-09-2002
			WO	02073153	A2	19-09-2002
			DE	10111458	A1	19-09-2002
			EP	1366361	A2	03-12-2003
			JP	2004532396	T	21-10-2004
US 6726820	B1	27-04-2004	US	2010307921	A1	09-12-2010
US 2005059105	A1	17-03-2005	NONE			
WO 2010004332	A1	14-01-2010	AU	2009269761	A1	14-01-2010
WO 2009035732	A2	19-03-2009	US	2009078023	A1	26-03-2009
WO 2009093019	A2	30-07-2009	US	2010294659	A1	25-11-2010